GREENSPAN

PS-1000A

PRESSURE SENSOR

PRODUCT USER MANUAL

141 Palmer Street, Richmond VIC 3121 Australia T:+61 3 8420 8999 sales@greenspan.com.au

CONTENTS

1 Introduction

1.1 System Description

Thank you for purchasing the Greenspan Pressure Sensor Model PS1000. This manual provides a guide to the configuraÉon, operaÉon and maintenance of these sensors to provide long term reliable and accurate monitoring.

The Greenspan PS-1000A is fully submersible Pressure Measurement Sensor designed for remote applicaÉons. It uÉlises a sophisÉcated capaciÉve ceramic pressure sensitive diaphragm. Its special features include high overload protecÉon (up to 60 Émes nominal pressure) corrosion resistance and long term stability. The change in the capaciÉve element varies with applied pressure. This variaÉon is measured by an electronic circuit and converted into an analogue output. The sensor can be supplied in a variety of standard ranges.

The PS-1000A has a standard, 2-wire, loop powered, 4-20mAoutput with an opÉon for 0-2.5Vdc suitable for a wide range of Data Loggers, Process Controllers and other third party devices. New features include the ability to re-range the sensor as well as adjust the fluid density and gravity to suit specific applicaÉons.

The instrument is packaged in a robust, Acetal housing fully sealed against moisture penetraÉon and is hardwired to cable supplied by Greenspan.

The sensors are suitable for applicaÉons in harsh remote applicaÉons including groundwater, streams and rivers, water storage bodies including straÉficaÉon studies, hydrological run off studies and industrial process monitoring.

1.2 How to Use the Manual

Along with this manual, there are several other documents that may assist in the successful configuraÉon and operaÉon of the Greenspan PS-1000A Sensor. These should be maintained on file as a permanent reference as to the features, applicaÉons and use of the PS-1000A.

Greenspan PS-1000A – Specifications Brochure

Greenspan PS-1000A – Certificate of Conformance

Greenspan PS-1000A – Quick Start Guide

1.3 Certification

The PS-1000A sensors are assembled and tested in accordance with Greenspan's ISO 9001 Quality CerÉfied System. Following calibraÉon the sensors undergo a range of addiÉonal control processes to ensure that all specificaÉons are consistent and documented.

> ***The instrument is visually inspected, marked and labelled.***
> ***The complete sensor calibration record is archived for reference, and batch number information is kept on file for statistical analysis.***
> ***An individual Certificate of Conformance is issued to the customer.***

1.4 Unpacking and Inspection

All Greenspan Sensors are made to order and are individually calibrated and inspected. This ensures that they leave the factory in a working condiÉon. On receipt, the customer should inspect the packaging and contents for any signs of damage during transportaÉon. The customer should also check that all items on the delivery note have been received.

Please contact the factory in case anything has been damaged or missing. A full set of documentaÉon including CerÉficate of Conformance, Quick Start Guide, and User Manual will be provided with all equipment – either in hard copy format or in electronic format on the USB shipped with the goods.

The Sensor is fitted with an Acetal body which provides superior corrosion protecÉon in a wide range of chemically acÉve waters. Because an individual sensor may be used in a variety of locaÉons, media compaÉbility should be checked before installing and advice sought from Greenspan if any doubt exists.

Because an individual sensor may be used in a variety of locaÉons, media compaÉbility should be checked before installing and advice sought from Greenspan if any doubt exists.

1.5 Serial Number

Checking the Model Number and Range

Before installing your Greenspan PS-1000A sensor check the informaÉon on the label is correct to confirm you have received the instrument you have ordered. The label will look similar to this.

M ODEL PS1000

RANGE 0 –xx m

S/ N 012345

The customer is advised to keep a record of the serial numbers in case the sensor is lost or the label damage. Greenspan keeps records of all sensors sold including a calibraÉon history.

1.6 Warranty Policy

Greenspan warrants all new Greenspan products against defects in materials and workmanship for **12 months** from the date of invoice. Products that prove to be defective during the warranty period will be repaired or replaced at the discreÉon of Greenspan.

Under Greenspan warranty condiÉons; it is the responsibility of the customer to cover shipping charges back to the factory. Upon repair/replacement Greenspan will cover the return shipping charges to the customer.

This warranty does not apply to products or parts thereof which have been altered or repaired outside of the Greenspan factory or other authorised service centre; or products damaged by improper installaÉon or applicaÉon, or subjected to misuse, abuse neglect or accident. This warranty also excludes items such as reference electrodes and Dissolved Oxygen membranes that may degrade during normal use.

Greenspan will not be liable for any incidental or consequenÉal damage or expense incurred by the user due to parÉal or incomplete operability of its products for any reason whatsoever or due to inaccurate informaÉon generated by its products.

All Warranty service will be completed as soon possible. If delays are unavoidable customers will be contacted immediately.

Any sensor should not be dismantled unless under instrucÉon from Greenspan Technical Service staff. Incorrect handling will void the warranty.

1.7 Factory Service & Repair

The correct choice of sensor and assistance with field installaÉon can be provided by Greenspan and their sales offices. A correct choice of equipment, together with technical advice and field experience should result in long term success in the field. **Greenspan Technical Services** is dedicated to customer support and provides assistance in the selecÉon, installaÉon, deployment and commissioning of sensors with a full range of consulÉng services. All Greenspan products are designed, developed and manufactured in Australia and can be supplied at short noÉce.

If for some reason sensors are required to be returned to our factory or your sales representaÉve, please note the model and serial number, Describe the problem, including how and under what condiÉons the instrument was being used at the time of malfunction. Clean the product and cable. Decontaminate thoroughly if used in toxic or hazardous environment. Carefully pack product in original packaging if possible & include a statement cerÉfying product and cable have been decontaminated with supporÉng information. Products returned for repair must be accompanied by a completed GRA (Goods Return Advice) form. All sensors returned for service and repair work must be properly decontaminated prior to return. A cleaning charge may be applied to sensors that require further decontaminaÉon. Service work will not commence unÉl the quotaÉon has been accepted by the customer. A purchase order for all repair and service work will be required before work is carried out.

2 Sensor Overview

2.1 Theory of Measurement

The PS-1000A Pressure Sensor uÉlizes a ceramic-based, capaciÉve element as the transducer. This is designed to be of rugged construcÉon and incorporates acÉve electronics as an integral part of the transducer substrate to enhance reliability and accuracy. Force applied to the ceramic element, due to the pressure, deforms its shape. This deformaÉon causes a change in capacitance which can be measured by the electronics. The inherently stability and toughness of the ceramic ensures the repeatability and long term accuracy of the readings are maintained under the harshest field condiÉons.

The on board microprocessor converts the transducer output voltage to a digital signal and also measures the transducer temperature. This informaÉon is used to temperature compensate the sensor over the range 0 - 50°C. The result is converted to an analogue output of typically 4-20mA.

2.1.1 Ceramic Capacitive transducers

Benefits of the Ceramic Capacitance Sensors over other types of sensors are:

Extremely high overload limit (typically up to 10 X overload protecÉon)
Absolute resistant to wear
High temperature stability
Excellent Long term stability
Excellent Repeatability and linearity
No hysteresis effects normally associated with Strain Type Sensors
Corrosion resistant – Other sensors require contact of stainless steel face
Not subject to mechanical fatigue that may affect strain gauge type sensors
Low power consumpÉon suitable for remote monitoring & control units

2.1.2 *Water Density and Gravity*

When pressure sensors are used for depth readings of any fluid, the density becomes an important parameter. In Australia a standard describes the relaÉonship between force and water depth:

Australian Standard AS1376-1996 *

1kPa = 102.15 mm of pure water. @20degC

There is typically a 3% difference in the density between pure water and seawater. This difference should be considered when parÉcular measurement accuracy's are required.

Another factor affecÉng calibraÉon accuracy is gravity. The departure from standard gravity in Warwick, Qld is –0.17%. at laÉtude 27.973 deg, height 458m above sea level.

The PS-1000A has a feature to adjust the fluid density and gravity to suit specific applicaÉons.

*For condiÉons, see Clause 1.3.8.3 Australian Standard AS1376

2.2 Applications

ApplicaÉons in which the Greenspan PS-1000A can be used include:

Monitoring of streams and rivers.
Monitoring of water storage bodies including stratificaÉon studies.
Hydrological run off studies.
Ground and bore water analysis.
Industrial process monitoring.

2.3 Instrument Details

2.3.1 *Sensor Design*

The Greenspan PS-1000A consists of the following primary elements:

Ceramic capacitance transducer
47mm outer diameter
Acetal body material
Moulded cable entry

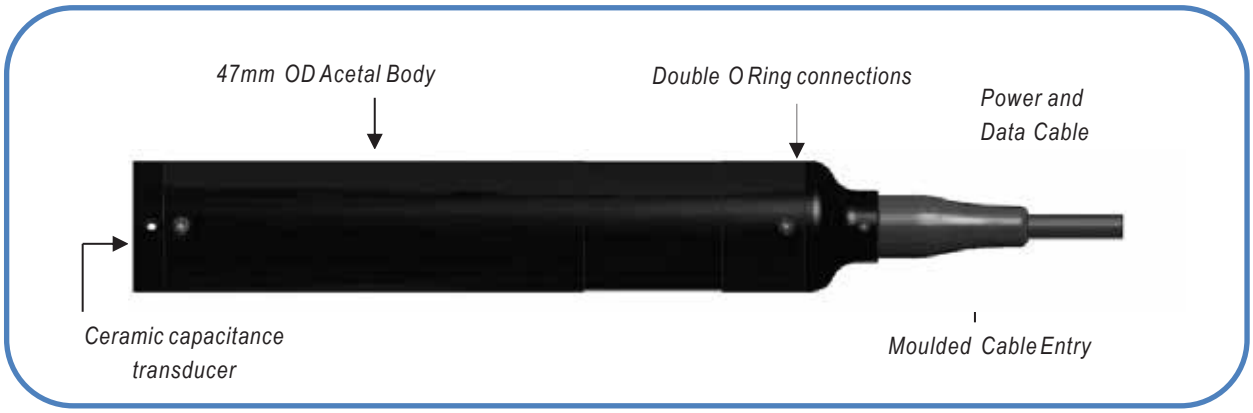

PS-1000A Primary Elements

2.4 Cable Details

All Greenspan Sensors uÉlise a specially designed Polyurethane Cable. The cable contains 12 x conductors, 1 x drain wire, and an internal vent tube. The outer jacket is made from UV stabilized Polyurethane and is suitable for all external, underwater or harsh environment applicaÉons. This common cable construction is uÉlized for vented and non-vented sensors and all Greenspan Water Quality Sensors. Cables are generally factory fiÖed at Éme of manufacture in specified lengths. Cables can be joined or repaired in the field providing a waterproof connecÉon can be maintained. AlternaÉvely, cables can be terminated in waterproof juncÉon boxes where cabling to other devices or longer cable runs are required.

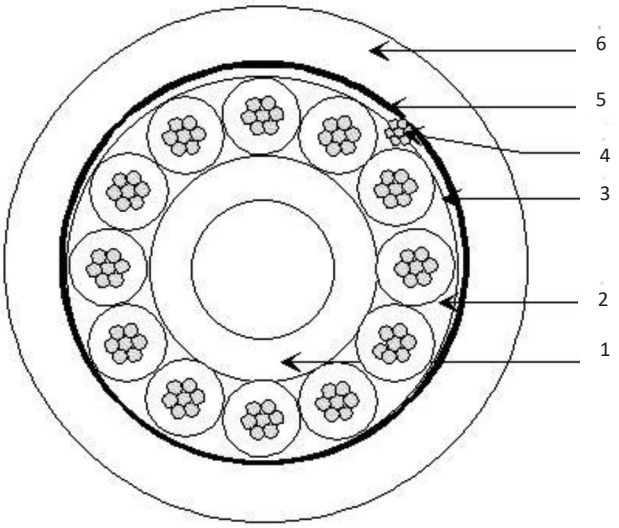

Cable Construction

1 –**Vent Tube:** Polyamide
(size ID x OD) 2.40 x 3.20 mm

2 - **12 x Conductors**
7 x 0.20 mm Tinned Copper
Section = 0.22mm2 AWG24
Insulation: Polypropylene
(size) = 1.10 mm ± 0.05 mm

3 - **Tape:** Polyester

4 – **Drain Wire:** 7x0.20 TinCu

5 - **Tape:** Polyester Aluminium

6 - **Jacket:** Polyurethane black,
(size OD) 8.05 mm ± 0.15

2.4.1 Mechanical Specifications

Specially Manufactured Greenspan Cable with 12 cores and Internal Vent
High chemical resilience and abrasive resistance
Conductor cross secÉon : AWG 24,
Electrical Resistance 9 ohm per 100m (per conductor)
OperaÉng temperature: 85°C (max.),
Bending radius (staÉc) : 6 ,
Bending radius (dynamic) 12.
Max OperaÉng voltage : 250V
Jacket PrinÉng (white colour each meter)
Conductor colour codes : green, yellow, white, black, brown,
turquoise, violet, pink, red, blue, grey
Tensile Strength is sufficient to self-suspend the Greenspan Sensor to depths of 300m.
Long term creep due to temperature effects or tensile loading is negligible.

The moulded cable is fiÖed to the sensor using a double o ring seal and located using 2 x grub screws. The length of the cable is not criÉcal to the long term calibraÉon and operaÉon of the sensor (provided the electrical requirements such as minimum supply voltage are maintained).

2.5 Options and Accessories

2.5.1 Absolute or Gauge

Gauge Sensors are vented to atmosphere so that the effects of changes in barometric or atmospheric pressure do not affect water level readings. Sensors that are not vented to atmosphere are referred to as Absolute Sensors. The primary difference between the two types of sensors is the effect of atmospheric pressure on the water level measurements they provide.

Barometric Pressure acts on both sides of a Gauge sensor (i.e. via the water on one side and via the vent tube on the other). The Barometric pressure is cancelled out and has no effect on the water level readings. Gauge Sensors will read zero in air.

Barometric atmospheric pressure acts only on one side of a non-vented or Absolute Sensor (on the water side). Any changes in Atmospheric pressure will be detected by the sensor and measured as changes in water pressure. As the Barometric pressure varies, these changes will be measured as water level changes even though the actual water level may have remained steady. Typical variaÉons in Barometric Pressure when converted to head of water are in the order of +/- 100mm. A large change in Weather PaÖern (Storm Front) may cause a drop in Barometric Pressure by up to 20Hpa which would cause an error of 200mm. Water level variaÉons caused by Barometric Pressure can be removed by monitoring barometric pressure (e.g. via a weather staÉon or barometric sensor) and then post processing the absolute water level readings.

The lowest, standard range, absolute pressure sensor offered is 20m, which is suitable for measuring water levels of up to approximately 10m. Absolute sensors will read zero in a perfect vacuum and around 10m in air depending on the atmospheric pressure.

Gauge sensors are suitable for most monitoring applications where water level readings are required. Absolute sensors are suitable for applicaÉons where a vented cable is not desirable (e.g. Battery pack only sensors).

2.5.2 Closed Venting System (CVS)

When pressure sensors are deployed, there can be a difference between the atmospheric temperature and the temperature of the sensor at depth.

7CVS-001 Closed Vent System

This temperature differenÉal causes a pumping effect to occur whereby moist air from the surface is drawn into the sensor through the vent line. This moisture can condense on sensitive electronic components due to warm surface air cooling inside the sensor.

Sealing the system against exposure to the atmosphere and condiÉoning the exisÉng air in the vent tube can alleviate this problem. Silica desiccant crystals easily absorb moisture thereby drying the air and are used in the closed loop venÉng system ***7CVS-001***.

For all gauge (vented sensors) a Closed Vent System must also be fitted (pictured leŐ). A single 7CVS-001 is designed to handle sensor cable lengths up to **70 metres**. MulÉple units may be joined together for greater capacity. Please refer to the Engineering Note in the appendix secÉon on the manual for detailed instrucÉons on the installaÉon of the 7CVS-001. Dimensions (including filter): length x width x height 16cm x 7cm x 5cm.

2.5.3 Protective Nose Cones

A protecÉvecopper nose cone *(Greenspan Part # 492-0241)* can be fiÖed to the pressure transducer to inhibit biological or marine growth on the sensor face. Similarly Greenspan also offer a stainless steel nose cone (pictured leŐ, *Greenspan Part # 492-0246*)

2.5.4 Process Fittings

Brass BSP threaded adaptors (Greenspan Part # 492-0238) can also be fiÖed to the PS-1000A for connecÉon when monitoring pressure in process applicaÉons. (Such applicaÉons may include, pipeline monitoring, gas bubblers and tanks).

2.5.5 Serial Breakout Adaptor

The serial breakout adaptor (Greenspan Part # 085-0080) allows connecÉon between the PS-1000A and a sensor and PC. The user is able to communicate with the sensor in RS232 mode to perform user field adjustments and calibraÉon via the PS-1000A UÉlity Software (supplied on USB with all PS-1000A purchases).

The serial breakout adaptor can also be connected directly to a mulÉmeter, enabling the user to check the analogue inputs on the sensor. The 085-0080 is supplied with a serial communicaÉons cable *(Greenspan Part # 087-0088)*. Please refer to the Engineering Note in the appendix secÉon of the manual for informaÉon.

2.5.6 Optional Serial Output – SDI Adapter Unit

A feature of the sensor is the ability to also provide serial output in SDI12 format using a small SDI Adapter unit connected to the end of the sensor cable. The SDI12 Adapter unit *(Greenspan Part # 7SDI-1000)* provides a standard 3 wire SDI12 output for connecÉon to a third party Data Logger or Process Controller.

Please refer to the 7SDI-1000 User Manual for more comprehensive instrucÉons on its use. The following informaÉon briefly outlines the quick set-up steps for both the sensor and 7SDI-1000.

Quick Set Up

Sensor set up

Set the PS-1000A as a RS232 instrument

1. Connect the sensor to a PC and run the PS-1000A uÉlity.
2. Click Sensor Set Up
3. Click RS232 radio buÖon
4. Click OK

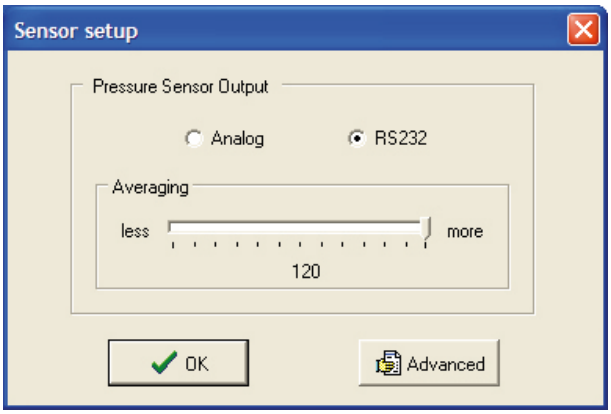

Provide physical connections

There is a cable available to assist connecÉng a bare wire sensor to the 7SDI-1000 adapter. Greenspan Part # 5CC-770 (pictured below)

Plug the Hirschman connector into the maÉng connector on the 7SDI-1000

Use the screw terminals to join the bare wires from the sensor. Red to Red, Blue to Blue, Yellow to yellow and Violet to Violet.

7SDI-1000

Set the 7SDI-1000 for the PS-1000A

2.6 Sensor Factory Calibration

The sensor is assembled and calibrated to the required range using Ruska Digital Pressure controllers which are externally calibrated in NATA cerÉfied laboratories.

The sensor is calibrated at mulÉple points over its pressure and temperature range (typically 36 points).

- The calibraÉon is validated at mulÉple different points (typically 25 points).
- Accuracy and linearity is calculated from the validaÉon data.

An extensive range of final calibraÉon and inspecÉon tests are carried out on every sensor.

The sensor is visually inspected and packed, ready for despatch.

The complete calibraÉon records, sensor history and batch number are placed on file and archived.

3 Sensor Operation

3.1 Wiring & Connections

The PS-1000A is a 2 wire, loop powered 4-20mA output sensor with an opÉon for 0-2.5Vdc. It is normally powered by an 8-30V DC power supply – which can be baÖery, solar or Mains Plug Pack.

The following diagram illustrates the typical wiring arrangement for the PS-1000A with 4-20mA output.

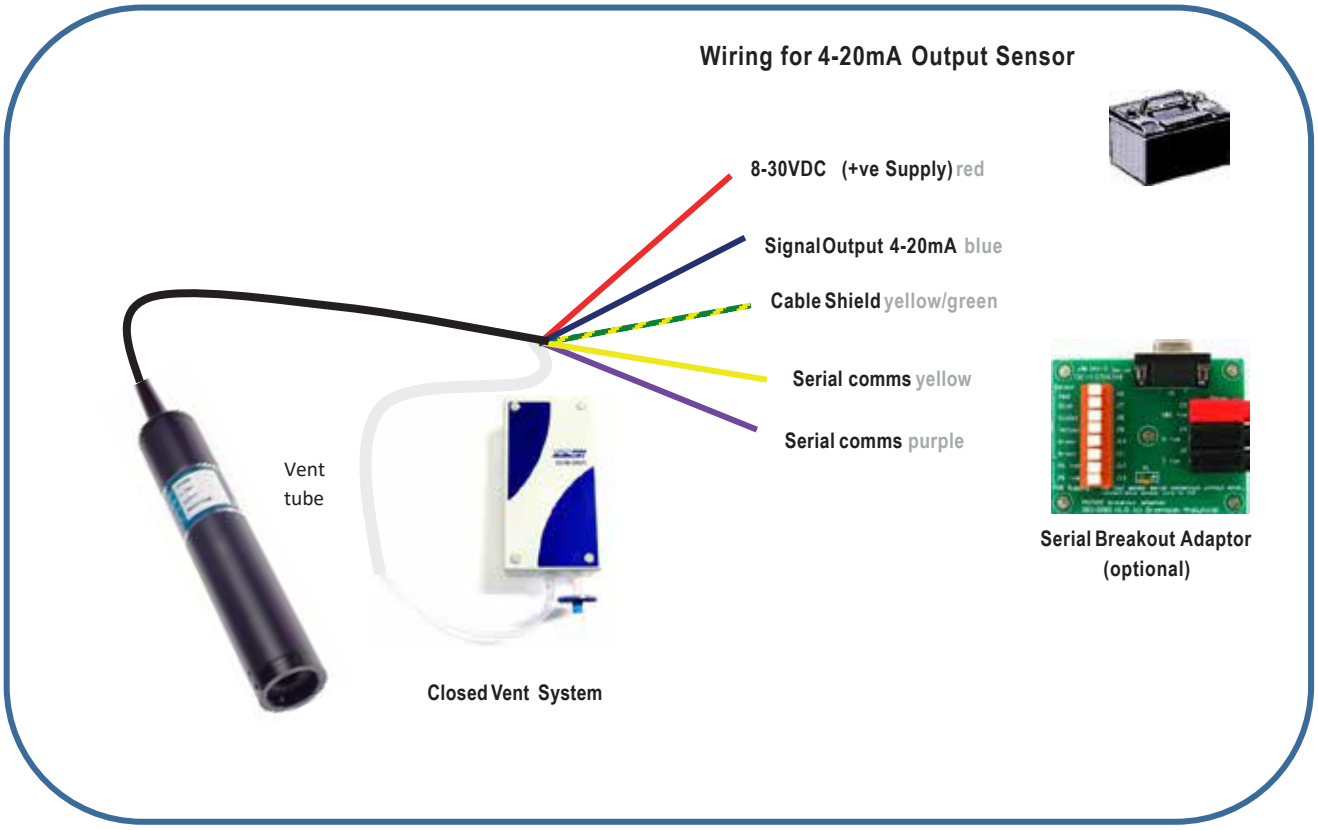

The following diagram illustrates the typical wiring arrangement for the PS-1000A with VOLTAGE output.

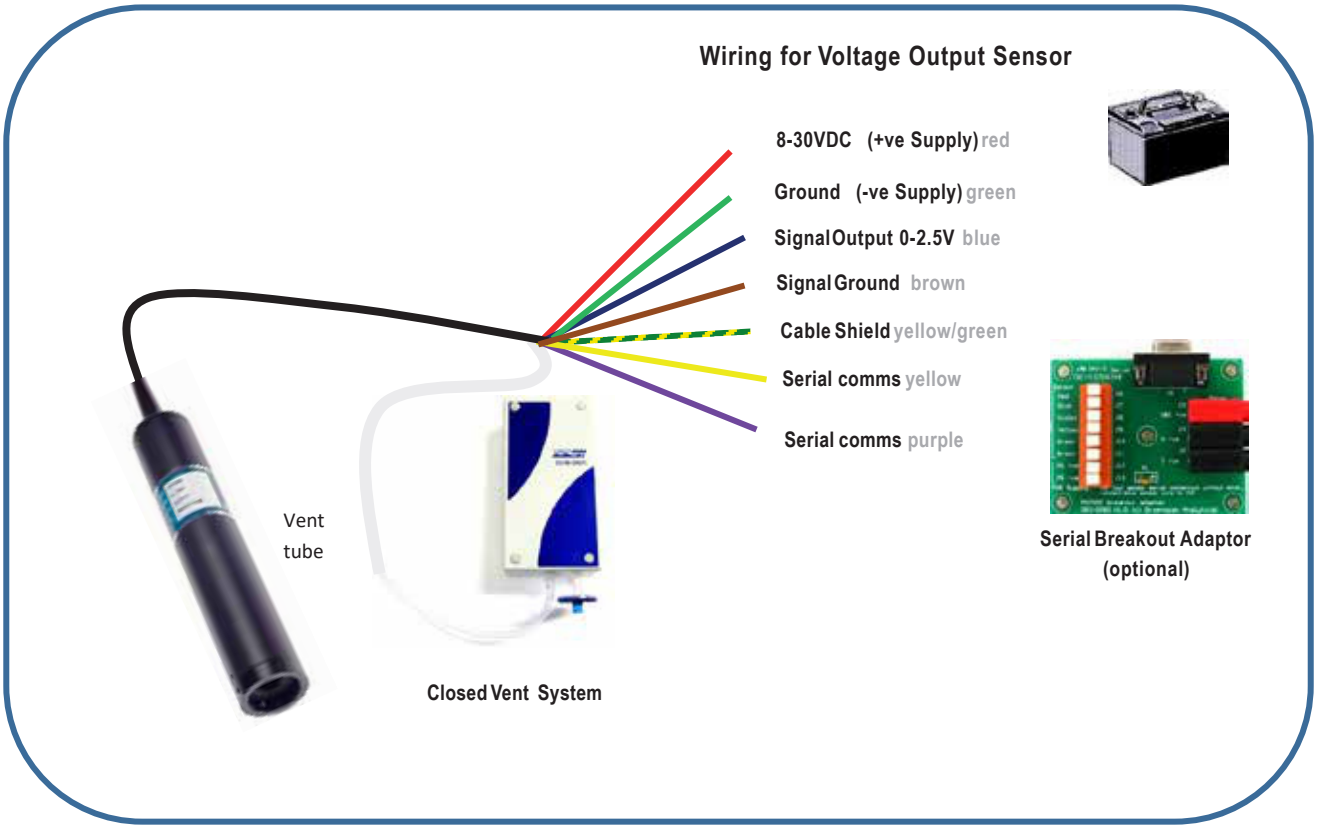

Typically the sensor will be connected to a Data Logger or Process Controller which will provide the power and ground connections and provide connections for serial SDI12 output.

The Power requirements of the sensor are detailed in the Specifications Brochure.

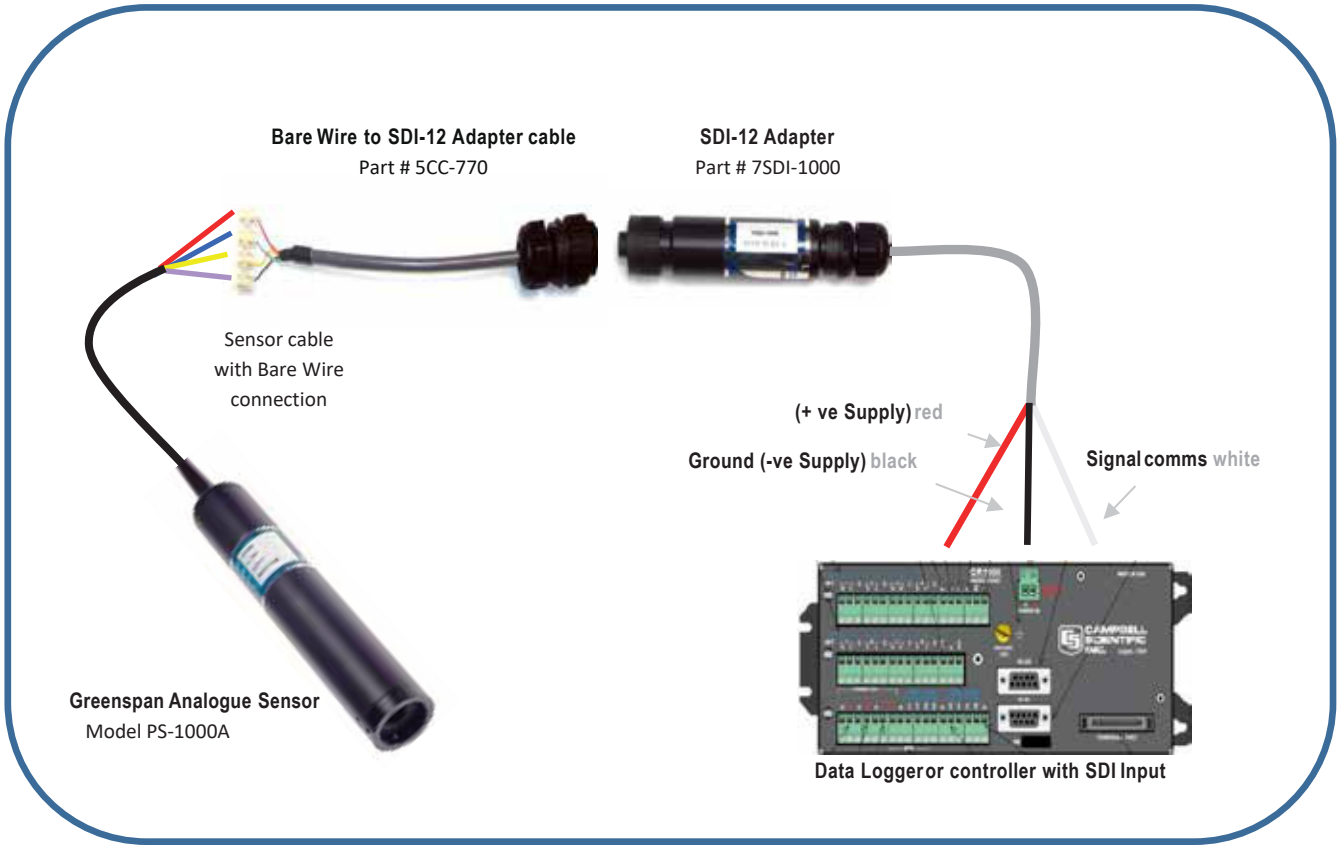

Software

CommunicaÉon with the PS-1000A Sensor is performed through the PC's RS232 serial port via the 085-0080 serial breakout adaptor and supplied software: **PS-1000A Utility** *(PS1000 Utility is supplied free of charge on all PS-1000A orders Greenspan Part # 7USB-SENSOR)*

To use the full funcÉons of the soŐware a fully operaÉonal sensor with power supply and all communicaÉons leads should be available.

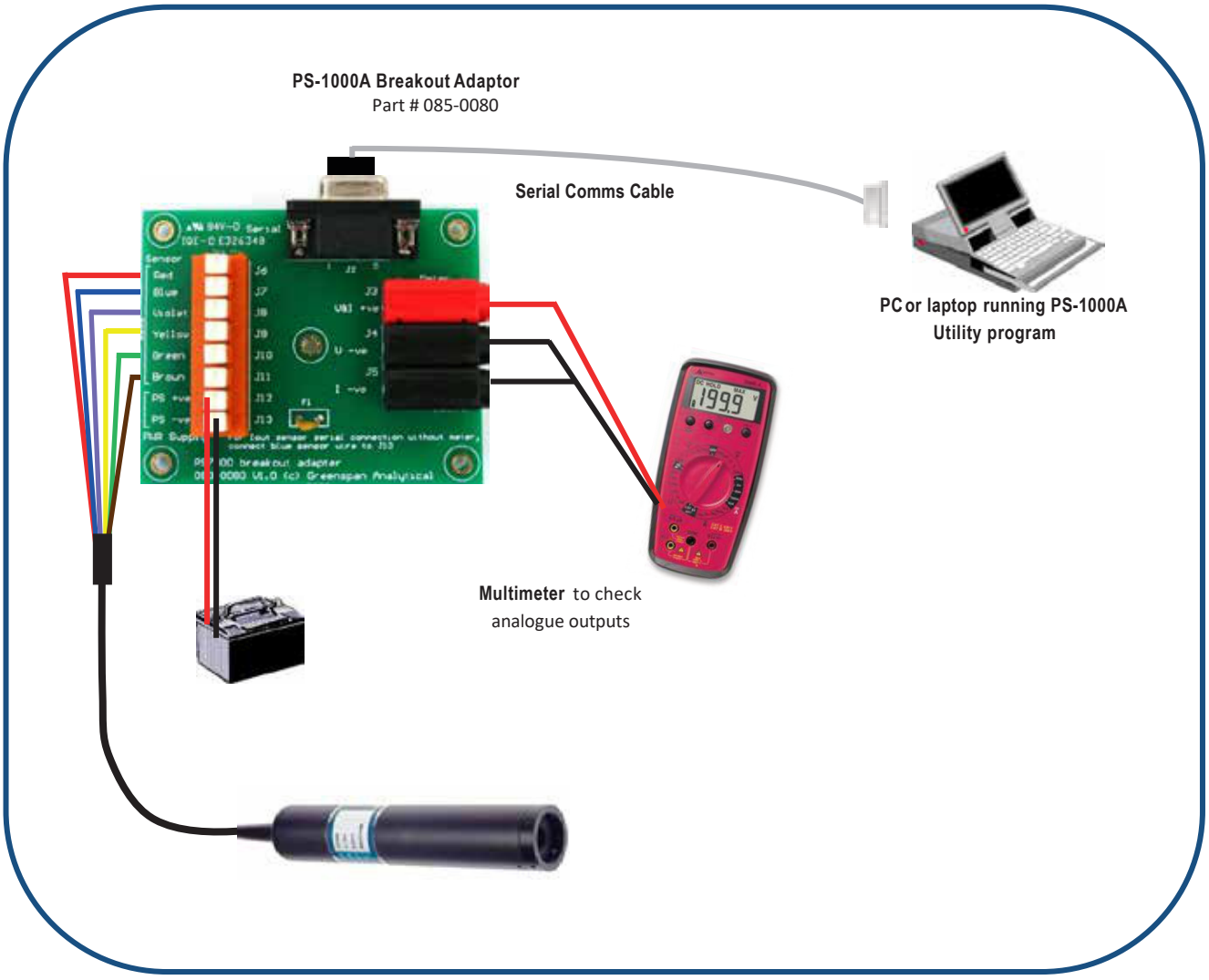

To Load the Software, Place Software CD in drive, and open the Application (exe) file.

The main screen is divided into three secÉons.

The top panel consists of a drop-down-list of all available serial ports, a Connect buÖon to connect to / disconnect from the sensor and a Help buÖon to access the online help. These are the only acÉve controls at start-up, select the port number where a sensor is connected, ensure that power supply is turned on then click Connect to iniÉate communicaÉons.

The middle secÉon contains three more buÖons: Load ConfiguraÉon, Save ConfiguraÉon and Sensor Setup; use these buÖons to load sensor seP ngs from a file, to save the current seP ngs to a file or to access the sensor configuraÉon screens. These controls remain disabled until a connecÉon is established. To the right of these buÖons are two text fields which display the sensor's serial number and firmware revision, if one is connected.

There is a data panel which displays current readings for both Pressure and Temperature; but only visible when RS232 is selected as sensor output.

A status bar at the boÖom shows the current state of the interface, while the LEDs indicate acÉvities on transmit and receive lines.

3.1.1 Connect

At start-up, the only active controls are a drop-down-list of all available serial ports and the Connect buÖon. Select the port number where a sensor is connected, ensure that power supply to the sensor is turned on then click Connect to iniÉate communicaÉons. The program will first read the sensor's serial number, its status and then the enÉre configuraÉon data file.

All other program controls remain inacÉve unÉl a connection is established. Once connected, the COM port control will be greyed out and disabled while the 'Connect' buÖon is changed to 'Disconnect' which can be used to terminate the current session.

Data transfer typically takes around 10 seconds to complete. It may take longer if there are errors occurred during data transfer; the interface will retry up to three Émes before reporÉng an error message.

In the event when the sensor's serial number has been read but the interface fails to receive a valid configuraÉon due to corrupted data, the user can upload new configuraÉons to the sensor from a file stored on PC, provided that the file's serial number matches up with that of the sensor.

3.1.2 Disconnect

Click Disconnect to terminate communicaÉons with the currently connected sensor.

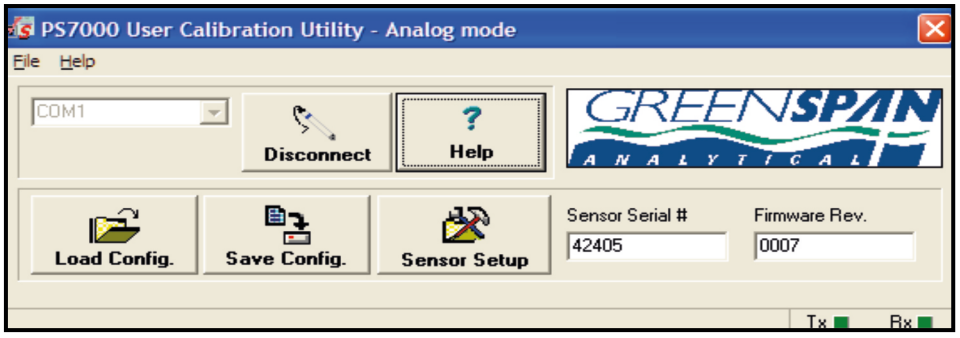

3.1.3 Sensor Setup

The Sensor Setup screen allows the user to select between analogue or serial output; it also lets the user adjust the number of averaging points. Click advanced buÖon to access more configuraÉon items and to re-calibrate sensor.

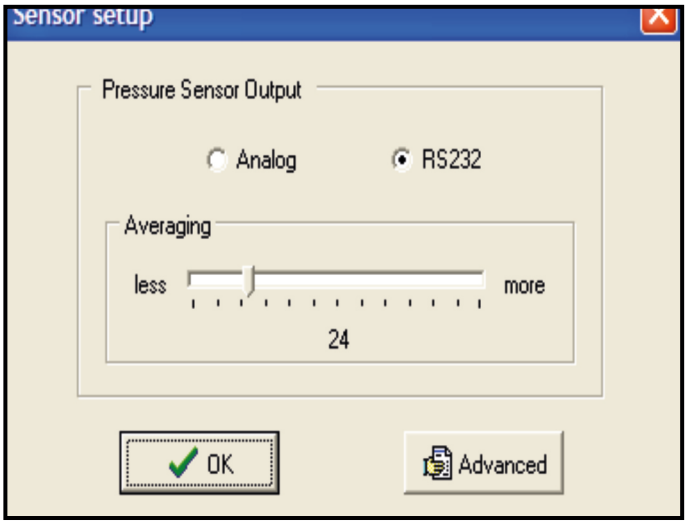

3.1.4 Analogue

Depending on the default factory setup, the sensed pressure is output as 4-20mA signal or 0-2.5V signal

3.1.5 RS232

The sensed pressure is output as digital data and displayed on screen, together with current temperature.

Note: If RS232 is selected as the output mode, the analogue output will not be available for use by remote displays and data loggers etc.

The sensor must be set to RS232 mode if you wish to use the sensor in conjunction with a 7SDI-1000 SDI12 Converter.

3.1.6 Averaging number

This sets the level of averaging. Lower levels of averaging will decrease response Émes but may also increase the level of noise. The factory default is 120 which give a response Éme of approximately 1 second.

3.1.7 Advanced Settings

The Advanced Sensor ConfiguraÉon screen allows the user to modify parameters such as Local Gravity, Specific Gravity and customized engineering units; it also lets the user to re-calibrate the pressure sensor using single point or two-point calibraÉon.

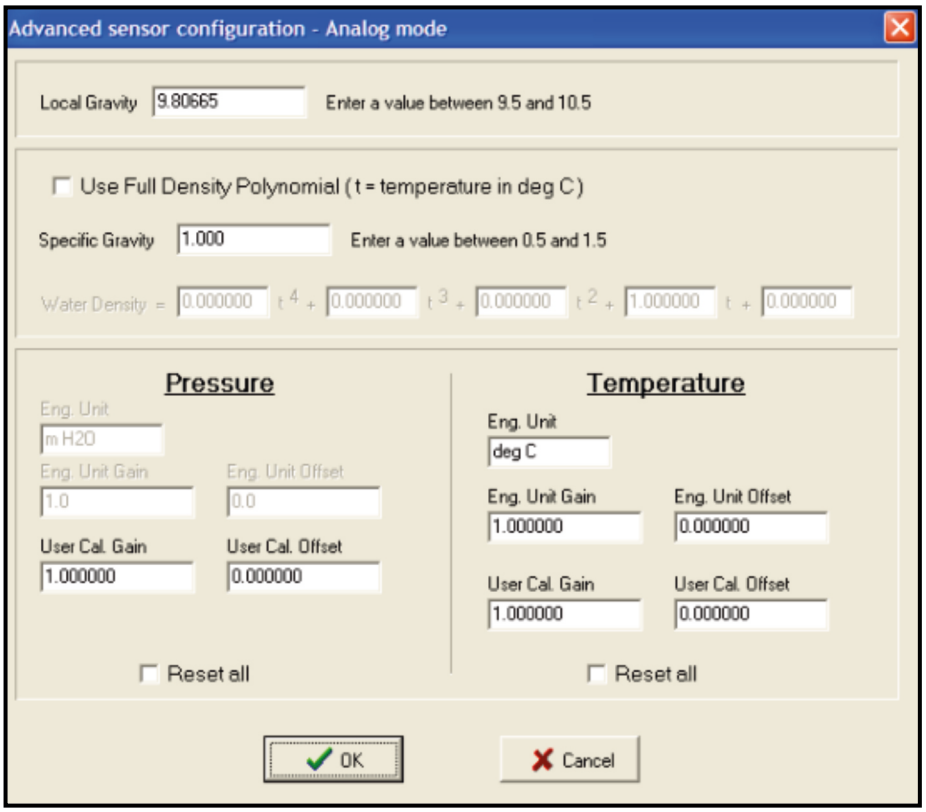

3.1.8 Local Gravity

Enter a new value directly into the text field.

3.1.9 Specific Gravity

There are two alternatives in specifying a value:

Where no temperature compensaÉon is required, deselect Use Full Density Polynomial and enter a fixed value to the Specific Gravity field. The user can specify the coefficients of a fourth-order density polynomial for temperature compensation. To do this, select Use Full Density Polynomial and enter the desired coefficients in the corresponding fields; The Specific Gravity field will be greyed out and changed to value of 1.

3.1.10 Engineering Units

The interface also lets the user enter customized engineering units, together with offset and gain for both pressure and temperature readings; note that these unit setÉngs only affect digital outputs displayed on the main screen.

Use Reset All to return to unity gain, zero offset, meters of water and degrees Celsius.

3.1.11 Calibrate Sensor

Use this buÖon to re-calibrate the pressure sensor and follow the on-screen instrucÉons to step through the required process. To perform a single-point calibraÉon, select 'NO' when prompted to proceed with the next calibraÉon point. Select 'YES' otherwise to complete the two-point calibraÉon.

The user may need to repeat the calibraÉon procedure to fine tune the offset and gain factors when large changes are made.

NOTE: All changes made to the Advanced Configuration screen, including data obtained from re-calibrating the sensor; do not take effect until the 'OK' button is clicked.

3.1.12 Pressure and Temperature Sensor Readings

The boÖom secÉon of the screen displays current readings for both pressure and temperature; this is only visible when RS232 is selected as sensor output.

3.1.13 Load Configuration

For loading a configuraÉon file stored on PC to the sensor. This buÖon is enabled as soon as a valid serial number is received. The interface will first check for a serial number match before proceeding to data transfer and resetÉng the sensor.

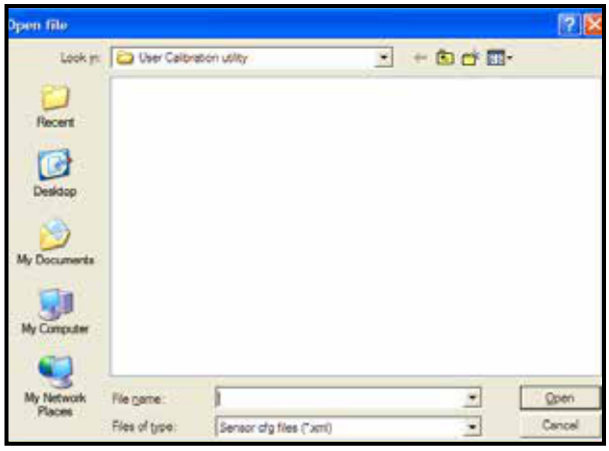

3.1.14 Save Configuration

Use this buÖon to save the current sensor seP ngs to a PC file. This buÖon is enabled only aÕer connecÉon to a sensor has been established.

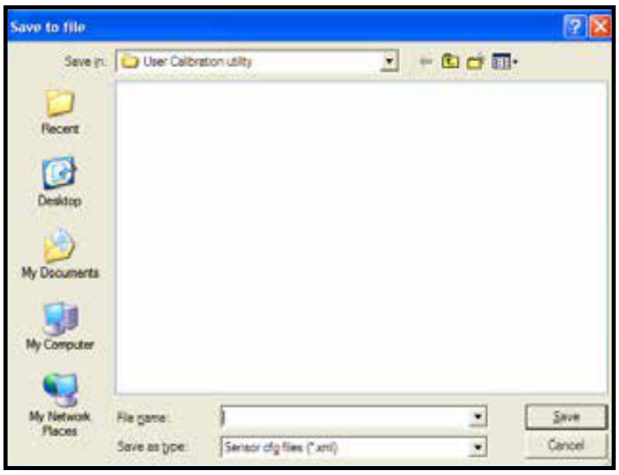

Fully Documented Help Function is available for PS-1000A Utility by clickingthe Help button or hitting the F1 key

4 Installation

4.1 Typical Sensor Installations

1. Edge of river/stream/lake embankment.
2. Side of boat/vessel.
3. Mounted within a sÉlling well off stream from main flow.
4. Mounted within drainage channels/pipes.
5. Suspended from dam walls or floaÉng pontoon.
6. Sensor anchored to bed of lake/stream.

4.2 Field Installation must ensure:

The sensor is anchored or held in posiÉon or located so it is not subject to any movement during normal operaÉons.

Sensor is protected from direct sunlight to avoid high temperature fluctuaÉons

Sensor is protected against high turbulence and possible debris loading during flow events

4.3 Cabling Considerations

Care should be taken with installaÉon and field servicing to ensure the cable is not subjected to persistent pulling snagging or severe compression. Cyclic loading of the cable should also be avoided through careful sensor deployment. AddiÉonal sÉlling wells or mounÉng brackets may be required to prevent sensor movement which may cause long term cable movement. Where cable runs are required which may be subject to environmental effects (heat, water movement, sunlight, flood debris etc.) it is advisable to protect the sensor cable inside a slightly larger diameter conduit such as PVC, steel or polyethylene. This also allows the sensor cable to be pulled out – should a sensor change-over be required at the site. Maximum cable runs up to several hundred meters are possible without affecting electrical signals. The maximum cable length is dependent on the capability of the com port of the computer. Most computers should be capable of driving a 150 to 200m cable length.

4.4 Field Installation must ensure:

The sensor is anchored or held in posiÉon or located so it is not subject to any movement during normal operaÉons.

Sensor is protected from direct sunlight to avoid high temperature fluctuaÉons

Sensor is protected against high turbulence and possible debris loading during flow events

4.5 Other Considerations

Environmental compaÉbility should be checked before using the sensors and advice sought from Greenspan if any doubt exists. The sensor uÉlises some 316 stainless components that are suitable in a majority of situaÉons but care should be taken against possible corrosion in high Chloride, Sulphate or Ferric soluÉons. The sensor should always be totally immersed under the water to ensure that the sensor is at water temperature and to also avoid any possible anodic/cathodic acÉon taking place on the components at the water-air interface. If using clamps to mount the sensor – these should be of a type that evenly clamps the sensor body without excessive loading that could damage the sensor body.

4.6 Guidelines for cleaning equipment

The sensor may be cleaned using a soŐ cloth, mild detergents and warm water. If the sensor shows signs of marine growth a light biocide can be used to clean and kill any biological growth on the sensor.

5 Appendix A -Additional Information

5.1 Specifications

Measurement Technique	½ " ceramic capacitance transducer
Standard ranges available Gauge	2.5, 5, 10 20 40 75 100m
Absolute	20, 40, 75, 100m
Other Ranges Available	Yes (consult sales office)
Sensor Output	4-20mA, or optional 0-2.5Vdc, SDI12 (via 7SDI-1000)
Overall Accuracy (combined linearity, hysteresis & repeatability)	+/- 0.1% full scale
Long term stability	0.2% full scale per annum
Zero Offset and full scale maximum variation	+/- 0.02mA
Cable type	Polyurethane sheathed cable, OD 8mm, with 3mm vent tube, Aramid reinforced, moulded entry, bare wire connection
Cable Lengths	10, 20, 30, 50, 100, 150m (32, 65, 100, 165, 325, 490 FT)
Closed Vent System (CVS)	Gauge sensors must be fitted with a CVS
Power Supply	8-30Vdc (at sensor) loop powered
Reverse Polarity Protected	Yes
Surge Current Protected	To 2kV
Warm Up Time to Stable Reading	<150ms
Current Consumption	Up to 20mA while turned on, 0mA when off
Operating Temperature	0-50°C
Storage Temperature	-5°C - +60°C
Max over pressure	At least twice the full scale range
Dimensions	328mm x 47mm (12.91" x 1.85")
Weight	550g plus cable weight (665g per 10m length)
Wetted Materials	Ceramic, 316 passivated stainless steel, polyurethane, viton
CVS Dimensions: length x width x height (including filter)	16cm x 7cm x 5cm

GREENSPAN

141 Palmer Street, Richmond VIC 3121 Australia
T:+61 3 8420 8999
sales@greenspan.com.au
www.greenspan.com.au